Technical data sheet
Mounting device
Part no.: 50080152

BT 64

Figure can vary

Contents

- Technical data
- Dimensioned drawings

Technical data

Basic data

Suitable for	LS 64

Mechanical data

Standard designation, metal mounting device	Steel, galvanized
Design of mounting device	Angle, L-shape
Type of fastening, at system	Through-hole mounting
Type of fastening, at device	Screw type
Type of mounting device	Rigid
Mounting device material	Metal

Classification

Customs tariff number	83024900
eCl@ss 5.1.4	27279202
eCl@ss 8.0	27279202
eCl@ss 9.0	27273701
eCl@ss 10.0	27273701
eCl@ss 11.0	27273701
ETIM 5.0	EC002498
ETIM 6.0	EC003015
ETIM 7.0	EC003015

Dimensioned drawings
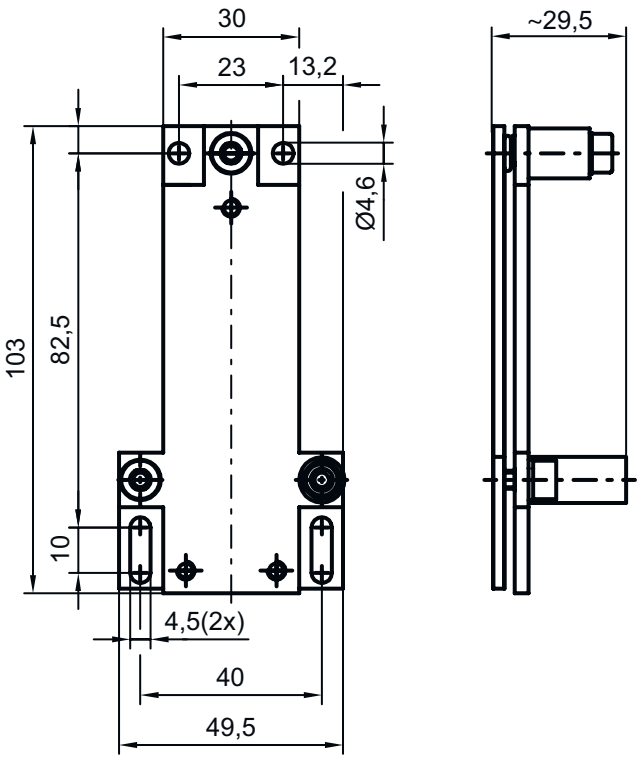
All dimensions in millimeters