Technical data sheet
Capacitive sensor
Part no.: 50135771
LCS-1M18M-N15PNO-K020P

Figure can vary

Contents

- Technical data
- Dimensioned drawings
- Electrical connection
- Circuit diagrams
- Operation and display
- Part number code
- Notes
- Accessories

Technical data

Leuze

Basic data

Series	LCS-1
Switching distance S_n	2 ... 15 mm
Assured switching distance	15 mm

Characteristic parameters

MTTF	226 years

Electrical data

Protective circuit	Polarity reversal protection
	Short circuit protected

Performance data

Supply voltage U_B	10 ... 30 V, DC
Residual ripple	0 ... 10 %, From U_B
Open-circuit current	15 mA
Temperature drift, max. (in % of S_r)	20 %
Repeatability, max. (in % of S_r)	2 %
Rated operating current	100 mA

Outputs

Number of digital switching outputs	1 Piece(s)

Switching outputs

Type	Digital switching output
Voltage type	DC

Switching output 1

Assignment	Connection 1, conductor 2
Switching element	Transistor, PNP
Switching principle	NO (normally open)

Timing

Switching frequency	100 Hz

Connection

Number of connections	1 Piece(s)

Connection 1

Function	Signal OUT
	Voltage supply
Type of connection	Cable
Cable length	2,000 mm
Sheathing material	PUR
Number of conductors	3 -wire
Wire cross section	0.34 mm²

Mechanical data

Design	Cylindrical
Thread size	M18 x 1 mm
Dimension (Ø x L)	18 mm x 75.5 mm
Type of installation	Non-embedded
Housing material	Metal
	Stainless steel
Stainless steel housing	V2A
Sensing face material	Plastic, Polybutylene (PBT)
Cover material	Plastic, Polybutylene (PBT)
Net weight	108 g

Operation and display

Type of display	LED
Number of LEDs	2 Piece(s)
Operational controls	Multiturn potentiometer (20 turns)
Function of the operational control	Sensitivity adjustment
Switching distance, adjustable	Yes

Environmental data

Ambient temperature, operation	-25 ... 85 °C

Certifications

Degree of protection	IP 67
Protection class	III
Certifications	c UL US
Standards applied	IEC 60947-5-2

Correction factors

Acetone	0.75
Acrylic resin	0.1 ... 0.25
Alcohol	0.85
Ammonia	0.7 ... 0.85
Aniline	0.4
Gasoline	0.1
Celluloid	0.15
Liquid chlorine	0.1
Ebonite	0.15
Epoxy resin	0.15 ... 0.35
Crude oil	0.05
Ethanol	0.85
Ethylene glycol	0.93
Freon R22 and 502 (liquid)	0.35
Grain	0.15 ... 0.3
Glass	0.2 ... 0.55
Glycerin	0.98
Rubber	0.15 ... 0.9
Wood, wet	0.6 ... 0.85
Wood, dry	0.1 ... 0.4
Carbon dioxide	0
Air	0
Marble	0.5
Flour	0.05
Melamine resin	0.25 ... 0.55
Milk powder	0.2
Nylon	0.2 ... 0.3
Oil-containing paper	0.25
Paper	0.1
Polyamide	0.3
Polyester resin	0.15 ... 0.5
Pressboard	0.1 ... 0.3
PTFE	0.1
Quartz glass	0.2
Salt	0.35
Sand	0.15 ... 0.3
Water	1
Cement dust	0.25
Sugar	0.15

Technical data

Customs tariff number	85365019
eCl@ss 5.1.4	27270102
eCl@ss 8.0	27270102
eCl@ss 9.0	27270102
eCl@ss 10.0	27270102
eCl@ss 11.0	27270102
ETIM 5.0	EC002715
ETIM 6.0	EC002715
ETIM 7.0	EC002715

Dimensioned drawings

All dimensions in millimeters

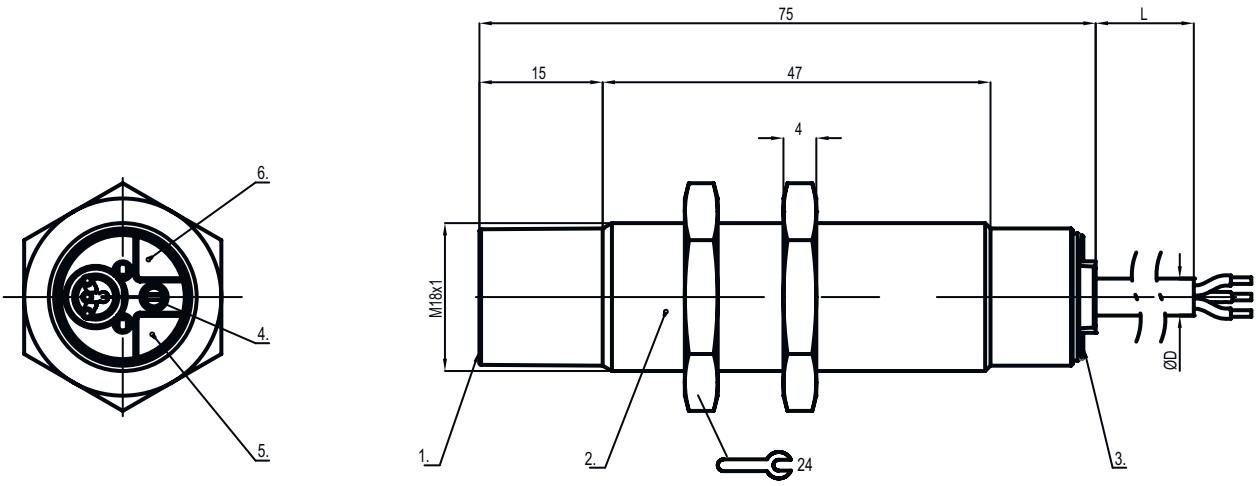

1 Active surface
2 Housing
3 Cover
4 Potentiometer
5 Green LED, operating voltage display
6 Yellow LED, function indicator

Electrical connection

Connection 1

Function	Signal OUT
	Voltage supply
Type of connection	Cable
Cable length	2,000 mm
Sheathing material	PUR
Number of conductors	3 -wire
Wire cross section	0.34 mm²

Conductor color	Conductor assignment
Brown	10 - 30 V DC
Black	OUT
Blue	GND

Circuit diagrams

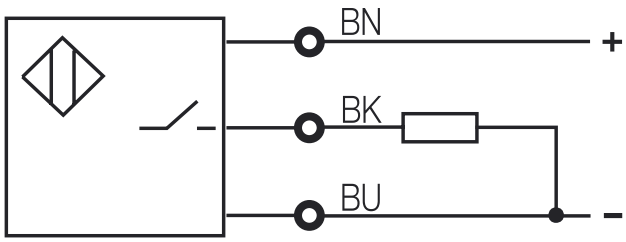

Operation and display

LED	Display	Meaning
1	Green, continuous light	Ready
2	Yellow, continuous light	Switching output/switching state

Part number code

Part designation: **LCS-ABBBC-DDDEFF-GHHHIJJJ KK**

LCS	**Operating principle** LCS: capacitive sensor
A	**Series** 1: series 1 "Extended" 2: series 2 "Advanced"
BBB	**Design** M12: series with M12 x 1 external thread M18: series with M18 x 1 external thread M30: series with M30 x 1.5 external thread Q40: series in cubic design, length 40 mm Q54: series in cubic design, length 54 mm
C	**Housing material** B: brass M: metal P: plastic/PBT T: PTFE
DDD	**Measurement range / type of installation** F03: typ. range limit 3.0 mm / embedded installation F04: typ. range limit 4.0 mm / embedded installation F05: typ. range limit 5.0 mm / embedded installation F06: typ. range limit 6.0 mm / embedded installation F08: typ. range limit 8.0 mm / embedded installation F10: typ. range limit 10.0 mm / embedded installation F15: typ. range limit 15.0 mm / embedded installation F20: typ. range limit 20.0 mm / embedded installation N06: typ. range limit 6.0 mm / non-embedded installation N08: typ. range limit 8.0 mm / non-embedded installation N15: typ. range limit 15.0 mm / non-embedded installation N25: typ. range limit 25.0 mm / non-embedded installation N30: typ. range limit 30.0 mm / non-embedded installation
E	**Output function** B: NC and NO contact N: NPN P: PNP
FF	**Switching** NC: normally closed contact NO: normally open contact NP: programmable
G	**Connection cable** K: cable n/a: no cable
HHH	**Cable length** 020: length 2,000 mm 003: length 300 mm n/a: no cable

Part number code

I	**Cable material** P: PUR T: PTFE V: PVC
JJJ	**Electrical connection** M08: M8 connector, 3-pin M12: M12 connector, 4-pin (plug)
KK	**Special equipment** L: IO-Link interface T: teach-in n/a: no special equipment

Note

A list with all available device types can be found on the Leuze website at www.leuze.com.

Notes

Observe intended use!

This product is not a safety sensor and is not intended as personnel protection.

The product may only be put into operation by competent persons.

Only use the product in accordance with its intended use.

Accessories

Mounting technology - Other

	Part no.	Designation	Article	Description
	50132729	AC D18M-CS	Clamp	Diameter, inner: 18 mm Design of mounting device: Mounting clamp Fastening, at system: Screw type, Through-hole mounting Mounting bracket, at device: insertable, Clampable with limit stop Type of mounting device: Clampable, With limit stop Material: Metal

Note

A list with all available accessories can be found on the Leuze website in the Download tab of the article detailed page.