Technical data sheet
Energetic diffuse sensor
Part no.: 50122561
ET318B.W3/2N

Figure can vary

Contents

- Technical data
- Dimensioned drawings
- Electrical connection
- Diagrams
- Operation and display
- Part number code
- Notes
- Further information
- Accessories

Technical data

Leuze

Basic data

Series	318B
Operating principle	Diffuse reflection principle

Special version

Special version	90° - angular optics

Optical data

Operating range	Guaranteed operating range
Operating range, white 90%	0.005 ... 0.35 m
Operating range, gray 50%	0.01 ... 0.29 m
Operating range, gray 18%	0.012 ... 0.19 m
Operating range, black 6%	0.015 ... 0.14 m
Operating range limit	Typical operating range
Operating range limit, white 90%	0.005 ... 0.45 m
Operating range limit, gray 50%	0.01 ... 0.38 m
Operating range limit, gray 18%	0.012 ... 0.25 m
Operating range limit, black 6%	0.015 ... 0.2 m
Light source	LED, Red
LED light wavelength	620 nm
Transmitted-signal shape	Pulsed
LED group	Exempt group (in acc. with EN 62471)

Electrical data

Protective circuit	Polarity reversal protection
	Short circuit protected

Performance data

Supply voltage U_B	10 ... 30 V, DC, Incl. residual ripple
Residual ripple	0 ... 15 %, From U_B
Open-circuit current	0 ... 20 mA

Outputs

Number of digital switching outputs	2 Piece(s)

Switching outputs

Voltage type	DC
Switching current, max.	100 mA
Switching voltage	high: ≥(U_B-2.5V)
	low: ≤2.5V

Switching output 1

Switching element	Transistor, NPN
Switching principle	Light switching

Switching output 2

Switching element	Transistor, NPN
Switching principle	Dark switching

Timing

Switching frequency	500 Hz
Response time	1 ms
Readiness delay	300 ms

Connection 1

Function	Signal OUT
	Voltage supply
Type of connection	Cable
Cable length	2,000 mm
Sheathing material	PUR
Cable color	Black
Number of conductors	4 -wire
Wire cross section	0.2 mm²

Mechanical data

Thread size	M18 x 1 mm
Dimension (Ø x L)	18 mm x 60.4 mm
Housing material	Plastic
Plastic housing	ABS
Lens cover material	Plastic
Net weight	70 g
Housing color	Black
	Red

Operation and display

Type of display	LED
Number of LEDs	1 Piece(s)
Operational controls	Teach button

Environmental data

Ambient temperature, operation	-40 ... 60 °C
Ambient temperature, storage	-40 ... 70 °C

Certifications

Degree of protection	IP 67
Protection class	III
Certifications	c UL US
Standards applied	IEC 60947-5-2

Classification

Customs tariff number	85365019
eCl@ss 5.1.4	27270903
eCl@ss 8.0	27270903
eCl@ss 9.0	27270903
eCl@ss 10.0	27270903
eCl@ss 11.0	27270903
ETIM 5.0	EC001821
ETIM 6.0	EC001821
ETIM 7.0	EC001821

Dimensioned drawings

All dimensions in millimeters

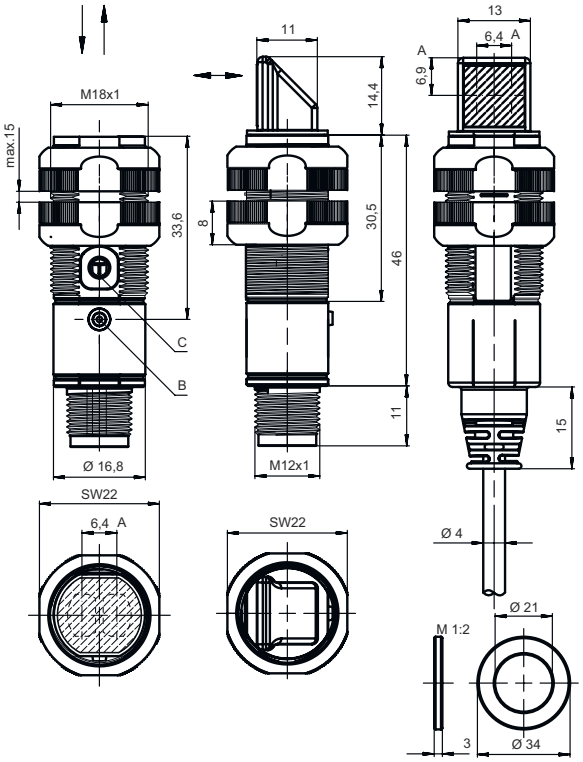

A Optical axis
B Indicator diode
C Teach button

Electrical connection

Connection 1

Function	Signal OUT
	Voltage supply
Type of connection	Cable
Cable length	2,000 mm
Sheathing material	PUR
Cable color	Black
Number of conductors	4 -wire
Wire cross section	0.2 mm²

Conductor color	Conductor assignment
Brown	V+
White	OUT 2
Blue	GND
Black	OUT 1

Diagrams

Typ. black/white behavior

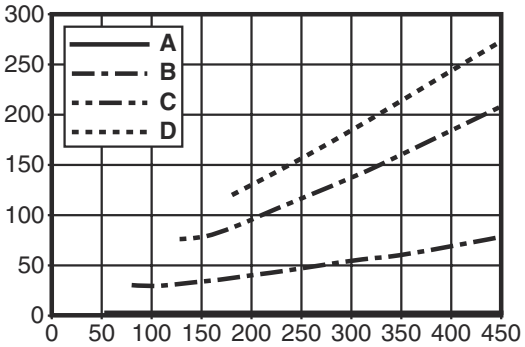

x Range [mm]
y Reduction of range [mm]

A White 90%
B Gray 50%
C Gray 18%
D Black 6%

Fading: black/white error < 50 %The black/white error is calculated from the operating range against white and the reduction of the operating range against black:**black/white error = reduction of the operating range against black / operating range against white x 100%**

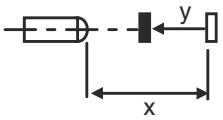

Operation and display

LED	Display	Meaning
1	Green, continuous light	Operational readiness
	Yellow, continuous light	Object detected

Part number code

Part designation: **XXX318BY-AAAF.BB/CC-DDD**

XXX318B	**Operating principle** PRK: retro-reflective photoelectric sensor with polarization filter ET: energetic diffuse reflection sensor FT: diffuse reflection sensor with fading LE: throughbeam photoelectric sensor receiver LS: throughbeam photoelectric sensor transmitter
Y	**Light type** n/a: red light I: infrared light
AAAF	**Preset range (optional)** n/a: operating range acc. to data sheet xxxF: preset range [mm]
BB	**Equipment** n/a: axial optics W: 90° angular optics 3: teach-in via button X: reinforced fading
CC	**Switching output / function (OUT1 = pin 4, OUT2 = pin 2):** 4: PNP transistor output, light switching P: PNP transistor output, dark switching 2: NPN transistor output, light switching N: NPN transistor output, dark switching 9: input for transmitter deactivation (deactivation with HIGH signal) D: input for transmitter deactivation (deactivation with LOW signal) X: pin not used

Part number code

DDD	**Electrical connection** n/a: cable, standard length 2000 mm, 4-wire M12: M12 connector, 4-pin (plug) 5000: cable, standard length 5000 mm, 4-wire 200-M12: cable, length 200 mm with M12 connector, 4-pin, axial (plug)

Note

- A list with all available device types can be found on the Leuze website at www.leuze.com.

Notes

Observe intended use!

- This product is not a safety sensor and is not intended as personnel protection.
- The product may only be put into operation by competent persons.
- Only use the product in accordance with its intended use.

For UL applications:

- For UL applications, use is only permitted in Class 2 circuits in accordance with the NEC (National Electric Code).
- These proximity switches shall be used with UL Listed Cable assemblies rated 30V, 0.5A min, in the field installation, or equivalent (categories: CYJV/CYJV7 or PVVA/PVVA7)

Further information

- Sum of the output currents for both outputs, 50 mA for ambient temperatures > 40 °C
- With the set scanning range, a tolerance of the operating range is possible depending on the reflection properties of the material surface.

Accessories

Mounting technology - Mounting brackets

	Part no.	Designation	Article	Description
	50113548	BT D18M.5	Mounting bracket	Diameter, inner: 18 mm Design of mounting device: Angle, L-shape Fastening, at system: Through-hole mounting Mounting bracket, at device: Screw type Type of mounting device: Rigid Material: Stainless steel

Accessories

Mounting technology - Rod mounts

	Part no.	Designation	Article	Description
	50117490	BTU D18M-D12	Mounting system	Design of mounting device: Mounting system Fastening, at system: Through-hole mounting Mounting bracket, at device: Screw type Type of mounting device: Clampable, Adjustable, Turning, 360° Material: Metal

Mounting technology - Other

	Part no.	Designation	Article	Description
	50083189	BT 318-ARH	Adjustment fastening part	Design of mounting device: Mounting plate Fastening, at system: Through-hole mounting Mounting bracket, at device: Screw type Type of mounting device: Swiveling, Adjustable Material: Metal
	50121904 **	BT318B-OM	Fastening	Design of mounting device: Mounting clamp Fastening, at system: Through-hole mounting Mounting bracket, at device: Screw type Type of mounting device: Swiveling, Adjustable, Turning Material: Plastic

** Included in delivery contents

Note

A list with all available accessories can be found on the Leuze website in the Download tab of the article detailed page.