Technical data sheet
Fieldbus gateway
Part no.: 50132999
MSI-FB-ETHERCAT

Figure can vary

Contents

- Technical data
- Dimensioned drawings
- Electrical connection
- Circuit diagrams
- Notes

Technical data

Basic data

Series	MSI-FB
Application	Transfer of MSI 400 diagnostic data via ETHERCAT

Functions

Functions	Fieldbus module for the MSI 400 for connecting to ETHERCAT

Electrical data

Performance data

Power consumption, max.	2.4 W

Output circuit

Interface

Type	Internal bus (SBUS+), EtherCAT

EtherCAT

Function	Process

Connection

Number of connections	2 Piece(s)

Connection 1

Function	BUS IN
Type of connection	RJ45

Connection 2

Function	BUS OUT
Type of connection	RJ45

Mechanical data

Dimension (W x H x L)	22.5 mm x 96.5 mm x 121 mm
Net weight	120 g
Housing color	Gray
Type of fastening	Snap-on mounting

Environmental data

Ambient temperature, operation	-25 ... 55 °C
Ambient temperature, storage	-25 ... 70 °C
Relative humidity (non-condensing)	10 ... 95 %

Certifications

Degree of protection	IP 20
Certifications	c UL US
Vibration resistance	5 ... 150 Hz
Test procedure for oscillation in accordance with standard	EN 60068-2-6
Shock resistance, single shock	30 g, 11 ms, EN 60068-2-27
Shock resistance, continuous shock	10 g, 16 ms, EN 60068-2-29

Classification

Customs tariff number	85371091
eCl@ss 5.1.4	27242208
eCl@ss 8.0	27242208
eCl@ss 9.0	27242208
eCl@ss 10.0	27242208
eCl@ss 11.0	27242208
ETIM 5.0	EC001423
ETIM 6.0	EC001423
ETIM 7.0	EC001423

Dimensioned drawings

All dimensions in millimeters

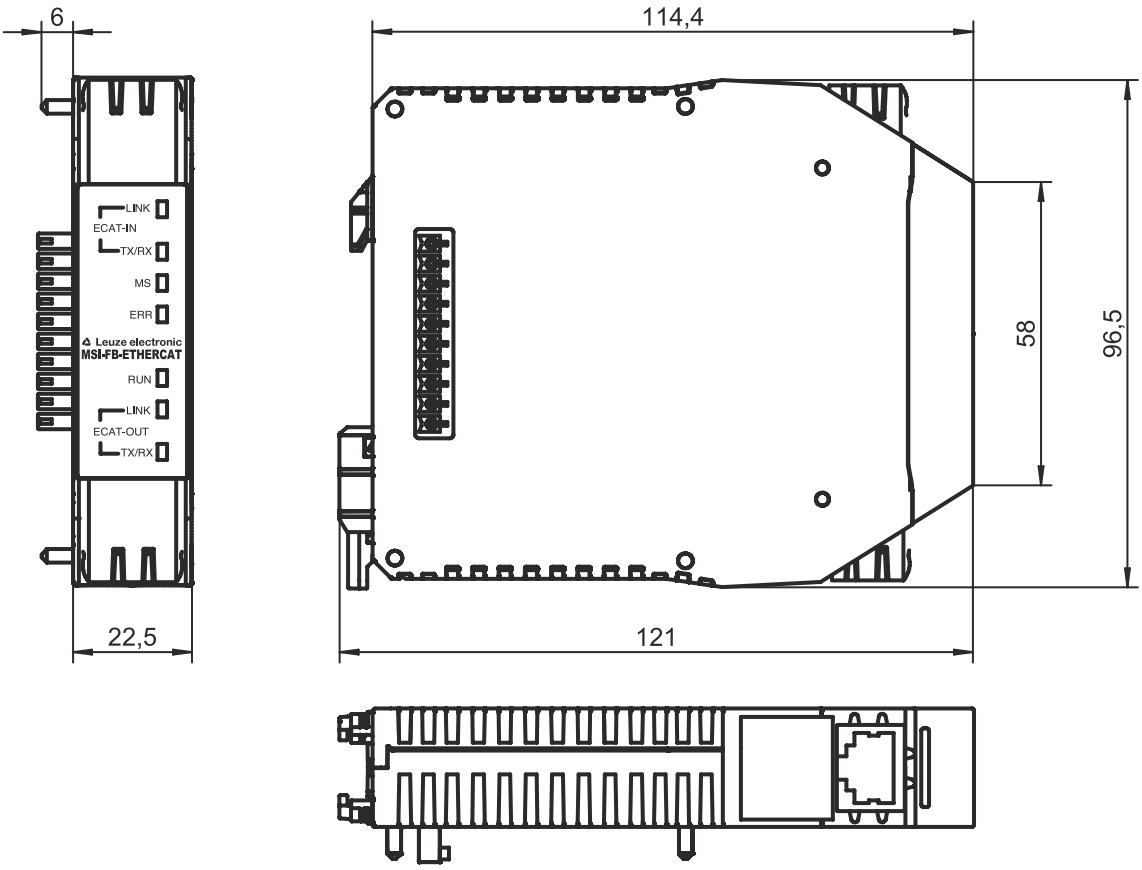

Electrical connection

Connection 1

Function	BUS IN
Type of connection	RJ45

Connection 2

Function	BUS OUT
Type of connection	RJ45

Circuit diagrams

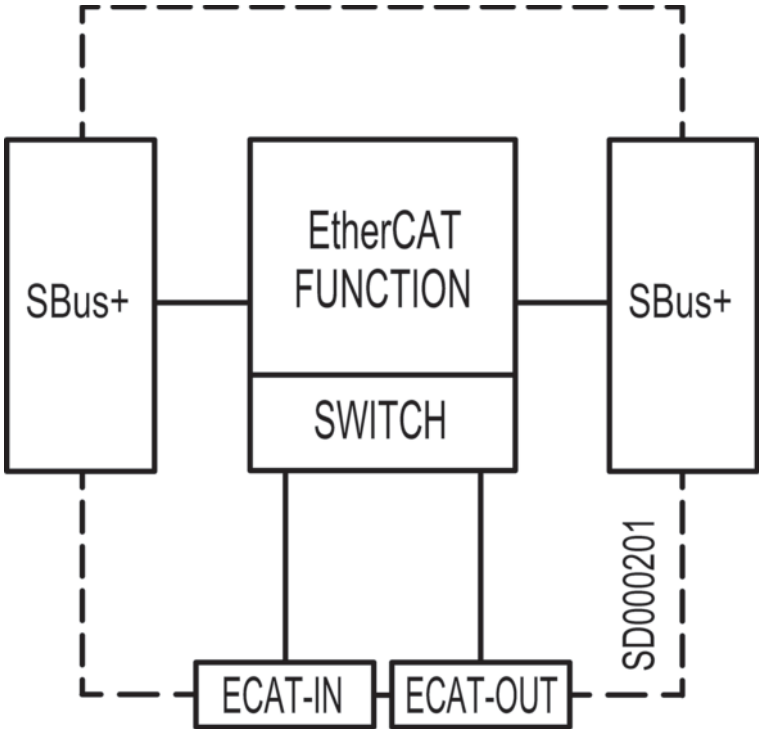

Notes

	Observe intended use!
	↳ The product may only be put into operation by competent persons. ↳ Only use the product in accordance with its intended use.